DS-1500 Series

Intel® Arrow Lake-S Core™ Ultra 200S Series Processors, High Performance and PCIe Expandable Rugged Embedded Computer, Supporting up to 2x PCI/PCIe Expansion Cards

Overview

CONTACT

The DS-1500 series is a high-performance, expandable, rugged embedded computer, supporting modular I/O expansion and up to two PCI/PCIe slots. It has international certifications for stable and reliable performance in harsh environments, making it perfect for smart manufacturing, railway, and more.

Key Features

- Intel® Arrow Lake-S Core™ Ultra 200S Series (Max 65 W TDP)
- 2x DDR5 SODIMM/CSODIMM Sockets, Up to 6400MHz, 96GB
- 2x PCI/PCIe Expansion Slots, Up to 130W Expansion
- Optional CMI Modules for I/O Expansion
- Optional CFM Modules for Hardware TPM, Ignition Sensing & PoE
- Wide Operating Temperature -40°C to 60°C

Certifications

Accelerated AI Capabilities

Supports Intel® Core™ Ultra 200S Series processors with integrated CPU, GPU, and NPU, delivering up to 36 TOPS of AI performance — 3.5× higher than the previous generation — making it an ideal choice for Edge AI applications.

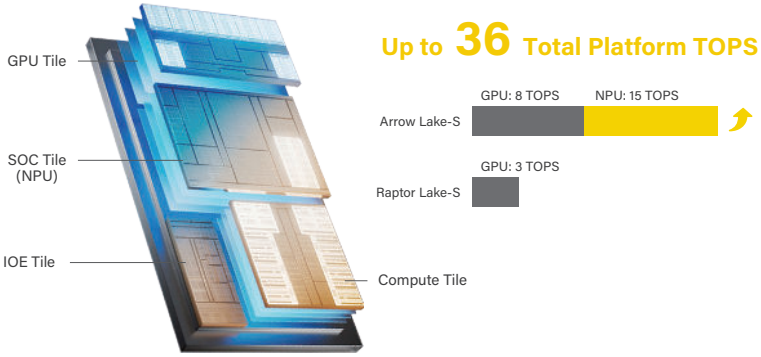

6400MHz DDR5

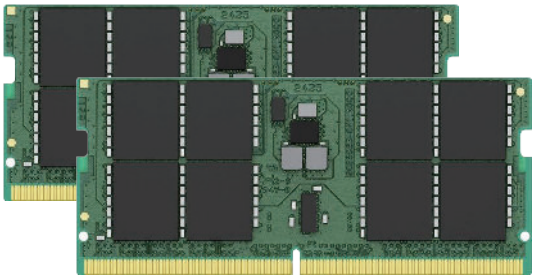

6400 MHz DDR5 CSODIMM

Two DDR5 CSODIMM slots support up to 96GB of 6400 MHz memory with ECC (Error Correction Code) technology for superior stability and reliability in industrial applications.

Rich and Expandable I/O

Native I/O and modular I/O expansion, providing high-speed transmission (10 GbE LAN, USB 3.2), industrial I/O (COM, DIO, PS/2), display outputs, and M.2 Key B/M/E slots for wireless communication modules or NVMe SSDs.

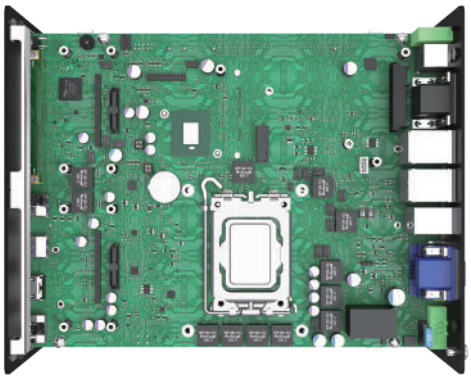

PCI/PCIe with Patented PCIe Card Retainer

Supports up to 2× PCI/PCIe expansion slots (DS-1502) for I/O, image capture, data acquisition, and motion control cards, or a single 130 W GPU card (111 × 235 mm). The patented adjustable card retainer secures expansion cards in high-vibration environments, ensuring long-term stable operation.

Rugged and Reliable

Industrial-grade protections include wide temperature (-40°C to 60°C) and wide voltage (9–48 VDC) support; overvoltage, overcurrent, and ESD protection. Meets US military shock and vibration standard (MIL-STD-810H), as well as rail EMC (EN 50121-3-2) and fire protection (EN 45545-2) standards.

-40 – 60°C
-40 – 140°F

9 - 48VDC

EN 50121-3-2
EN 45545-2

MIL-STD-810H

Specifications

Model Name	DS-1500	DS-1501	DS-1502
System			
Processor	▪ Arrow Lake-S Ultra 200S Series CPU: - Intel® Core™ Ultra 9 285 24 Cores Up to 5.6 GHz, TDP 65W - Intel® Core™ Ultra 9 285T 24 Cores Up to 5.4 GHz, TDP 35W - Intel® Core™ Ultra 7 265 20 Cores Up to 5.3 GHz, TDP 65W - Intel® Core™ Ultra 7 265T 20 Cores Up to 5.3 GHz, TDP 35W - Intel® Core™ Ultra 5 245 14 Cores Up to 5.1 GHz, TDP 65W - Intel® Core™ Ultra 5 245T 14 Cores Up to 5.1 GHz, TDP 35W - Intel® Core™ Ultra 5 225 10 Cores Up to 4.9 GHz, TDP 65W - Intel® Core™ Ultra 5 225T 10 Cores Up to 4.9 GHz, TDP 35W		
Chipset	▪ Intel W880 Chipset		
Memory	▪ 2x DDR5 SODIMM/CSODIMM Socket, Support Un-buffered and ECC Type - Ultra 9 / 7: Supports 6400MHz, 96GB - Ultra 5: Supports Up to 5600MHz, 96GB		
BIOS	▪ AMI BIOS		
Graphics			
Graphics Engine	▪ Integrated Intel® Xe LPG Graphics		
Maximum Display Output	▪ Supports Quad Independent Display		
VGA	▪ 1x VGA Connector : 1920 x 1200@60Hz		
DP	▪ 2x DP Connector : 4096 x 2304@60Hz - Support cable switch HDMI 4096 x 2160@30Hz * Verified maximum resolution: 3840x2160 @60Hz		
HDMI	▪ 1x HDMI Connector : 4096x2160@30Hz * Verified maximum resolution: 3840x2160 @30Hz		
Audio			
Audio Codec	▪ Realtek® ALC888, High Definition Audio		
Line-out	▪ 1x Line-out, Phone Jack 3.5mm		
Mic-in	▪ 1x Mic-in, Phone Jack 3.5mm		
I/O			
LAN	▪ 1x 2.5 GbE LAN, RJ45 - GbE1: Intel® I225 ▪ 1x GbE LAN, RJ45 - GbE2: Intel® I219		
COM	▪ 2x RS-232/422/485 with Auto Flow Control (Supports 5V/12V), DB9		
USB	▪ 2x 10Gbps USB 3.2 Gen2x1, Type A ▪ 4x 5Gbps USB 3.2 Gen1x1, Type A ▪ 2x 480Mbps USB 2.0, Type A		
PS/2	▪ 1 x PS/2, 6 Pin Mini-DIN Female Connector		
Storage / Expansion			
2.5" SSD / HDD	▪ 1x 2.5" Front Accessible SATA HDD/SSD Bay (SATA 3.0) ▪ 1x 2.5" Internal SATA HDD/SSD Bay (SATA 3.0)		
M.2 Key B Socket	▪ 1x M.2 Key B Type 3042/3052 Socket (PCIe Gen 4x2 / USB3.2 Gen2x1 / SATA 3.0), Support 5G / GNSS / Storage / Add-on Card Expansion ▪ 2x M.2 Key B Type 3042/3052 Socket (PCIe Gen 3x2 / SATA 3.0), Support GNSS / Storage / Add-on Card Expansion		
M.2 Key M Socket	▪ 1x M.2 Key M Type 2280 Socket (PCIe Gen3 x4 / SATA 3.0), Support Storage / Add-on Card Expansion		

PCI Express		▪ 1 x PCI/PCIe Expansion Slot with Optional Riser Card * Supports maximum dimensions of add-on card (H x L) : 111 x 235 mm * Supports GPU card up to 75W	▪ 2 x PCI/PCIe Expansion Slot with Optional Riser Card * Supports maximum dimensions of add-on card (H x L) : 111 x 235 mm * Supports GPU card up to 130W
SIM	▪ 2x SIM Socket		
CMI (Combined Multiple I/O) Socket	▪ 2x High Speed CMI Interface for optional CMI Module Expansion ▪ 2x Low Speed CMI Interface for optional CMI Module Expansion		
CFM (Control Function Module) Socket	▪ 1x CFM IGN Interface for optional CFM-IGN Module Expansion ▪ 1x CFM-TPM Interface for optional CFM-TPM Module Expansion		
Other Function			
RAID	▪ Support RAID 0/1/5/10		
External FAN Connector	▪ 1x External FAN Connector, 4-pin Terminal Block (Support Smart Fan by BIOS)		
Power Ignition Sensing	▪ Support Power Ignition Sensing Function with Delay Time Management and Selectable 12V/24V (With Optional CFM Module)		
TPM	▪ Support Discrete TPM2.0 (with Optional CFM Module)		
Clear CMOS Switch	▪ 1x Clear CMOS Switch		
Reset Button	▪ 1x Reset Button		
Instant Reboot	▪ Support 0.2sec Instant Reboot Technology		
Watchdog Timer	▪ Software Programmable Supports 256 Levels System Reset		
Antenna Holes	▪ 2		
Power			
Power Button	▪ 1x ATX Power On/Off Button		
Power Mode Switch	▪ 1x AT/ATX Mode Switch		
Power Input	▪ 9 - 48VDC, 3-pin Terminal Block		
Remote Power On/Off	▪ 1x Remote Power On/Off, 2-pin Terminal Block		
Remote Power LED	▪ 1x Remote Power LED, 2-pin Terminal Block		
Max Power Consumption	▪ 35W CPU: 163W ▪ 65W CPU: 262.8W - Test conducted with CPU, 1x RAM, and 1x storage - 100% load during burn-in testing		
Inrush Current (Peak)	▪ 35W CPU: 5.812 A@24V ▪ 65W CPU: 5.983 A@24V		
Physical			
Dimension(W x D x H)	▪ 227 x 261 x 88 mm	▪ 227 x 261 x 108 mm	▪ 227 x 261 x 128 mm
Weight Information	▪ 4.9 kg	▪ 5.3 kg	▪ 5.7 kg
Mechanical Construction	▪ Extruded Aluminum with Heavy Duty Metal		
Mounting	▪ Wall Mount		
Physical Design	▪ Fanless Design ▪ Cableless Design ▪ Jumper-less Design ▪ Unibody Design		
Reliability & Protection			
Reverse Power Input Protection	▪ Yes		
Over Voltage Protection	▪ Protection Range: 51~58V ▪ Protection Type: shut down operating voltage, re-power on at the preset level to recover		

Over Current Protection	▪ 15A
CMOS Battery Backup	▪ SuperCap Integrated for CMOS Battery Maintenance-free Operation
MTBF	▪ 307,224 - Database: Telcordia SR-332 Issue3, Method 1, Case 3
Operating System	
Windows	▪ Windows® 11, Windows® 10
Linux	▪ Ubuntu 24.04
Environment	
Operating Temperature	▪ 35W TDP Processor: -40°C to 60°C (-40°F to 140°F) ▪ 65W TDP Processor: TBC - With extended temperature peripherals; Ambient with air flow - According to IEC60068-2-1, IEC60068-2-2, IEC60068-2-14
Storage Temperature	▪ -40°C to 85°C (-40°F to 185°F)
Relative Humidity	▪ 95%@60°C (non-Condensing)
Shock	▪ MIL-STD-810H
Vibration	▪ MIL-STD-810H
EMC	▪ CE, UKCA, FCC, ICES-003 Class A
EMI	▪ CISPR 32 Conducted & Radiated: Class A ▪ EN/BS EN 50121-3-2 Conducted & Radiated: Class A ▪ EN/BS EN IEC 61000-3-2 Harmonic current emissions: Class A ▪ EN/BS EN61000-3-3 Voltage fluctuations & flicker ▪ FCC 47 CFR Part 15B, ICES-003 Conducted & Radiated: Class A
EMS	▪ EN/IEC 61000-4-2 ESD: Contact: 6 kV; Air: 8 kV ▪ EN/IEC 61000-4-3 RS: 80 MHz to 1000 MHz: 20 V/m ▪ EN/IEC 61000-4-4 EFT: AC Power: 2 kV; Signal: 2 kV ▪ EN/IEC 61000-4-5 Surges: AC Power: 2 kV ▪ EN/IEC 61000-4-6 CS: 10V ▪ EN/IEC 61000-4-8 PFMF: 50 Hz, 1A/m ▪ EN/IEC 61000-4-11 Voltage Dips & Voltage Interruptions: 0.5 cycles at 50 Hz
Railway	▪ EMC: EN 50155: 2021 Clause 4.4.6, 13.4.9 - EN 50121-1 : 2017 - EN 50121-3-2: 2016 + A1: 2019
Fire Protection	▪ EN 45545-2

DS-1500 External Layout

Front I/O

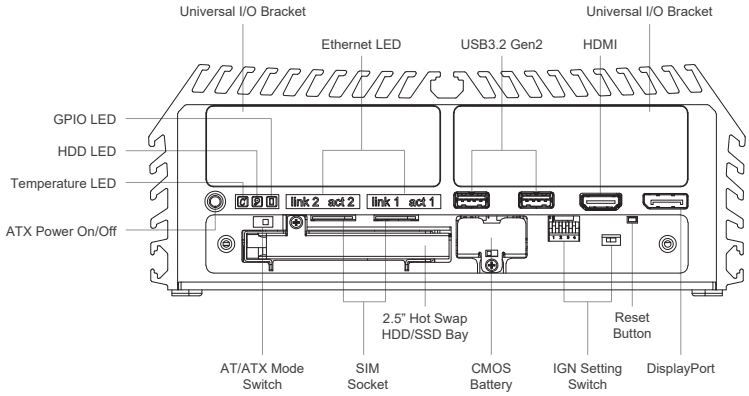

Rear I/O

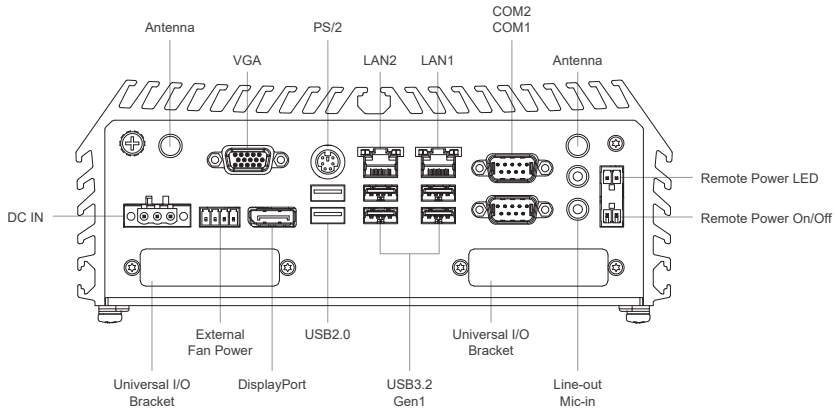

DS-1501 External Layout

Front I/O

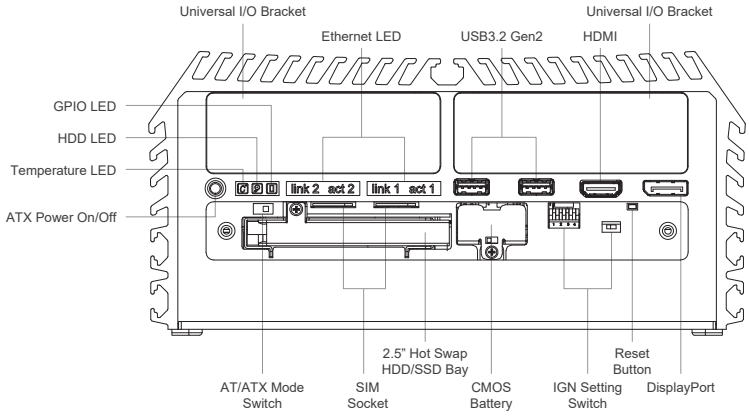

Rear I/O

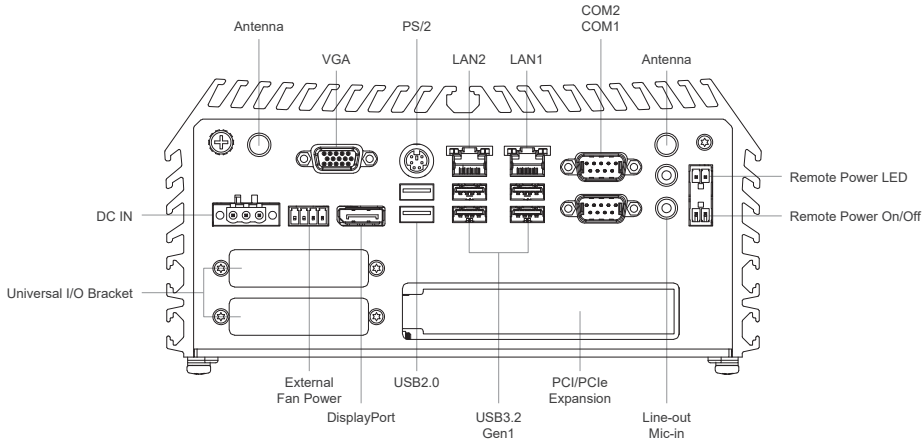

DS-1502 External Layout

Front I/O

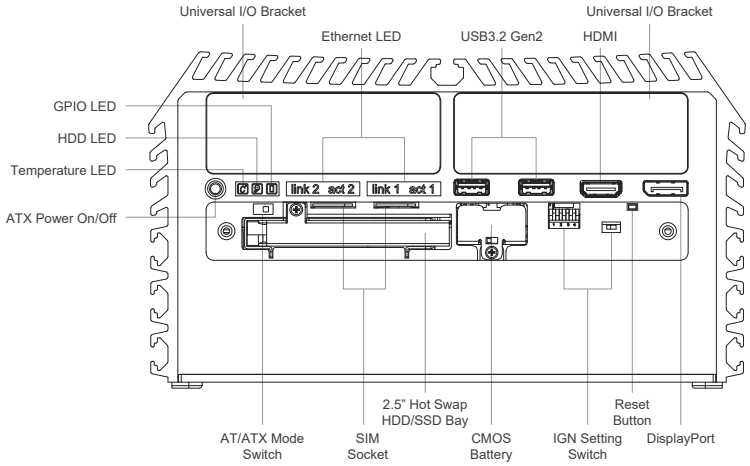

Rear I/O

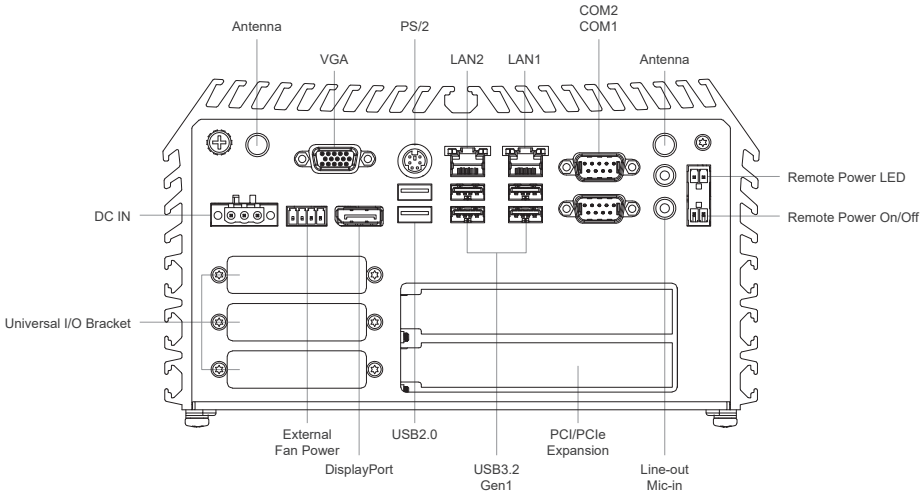

DS-1500 Dimensions

NOTE:
1.A=6_Φ4.5mm Hole
2.B=4_M4 NUT Hole
3.C=4_Φ4.5*Φ8mm Hole

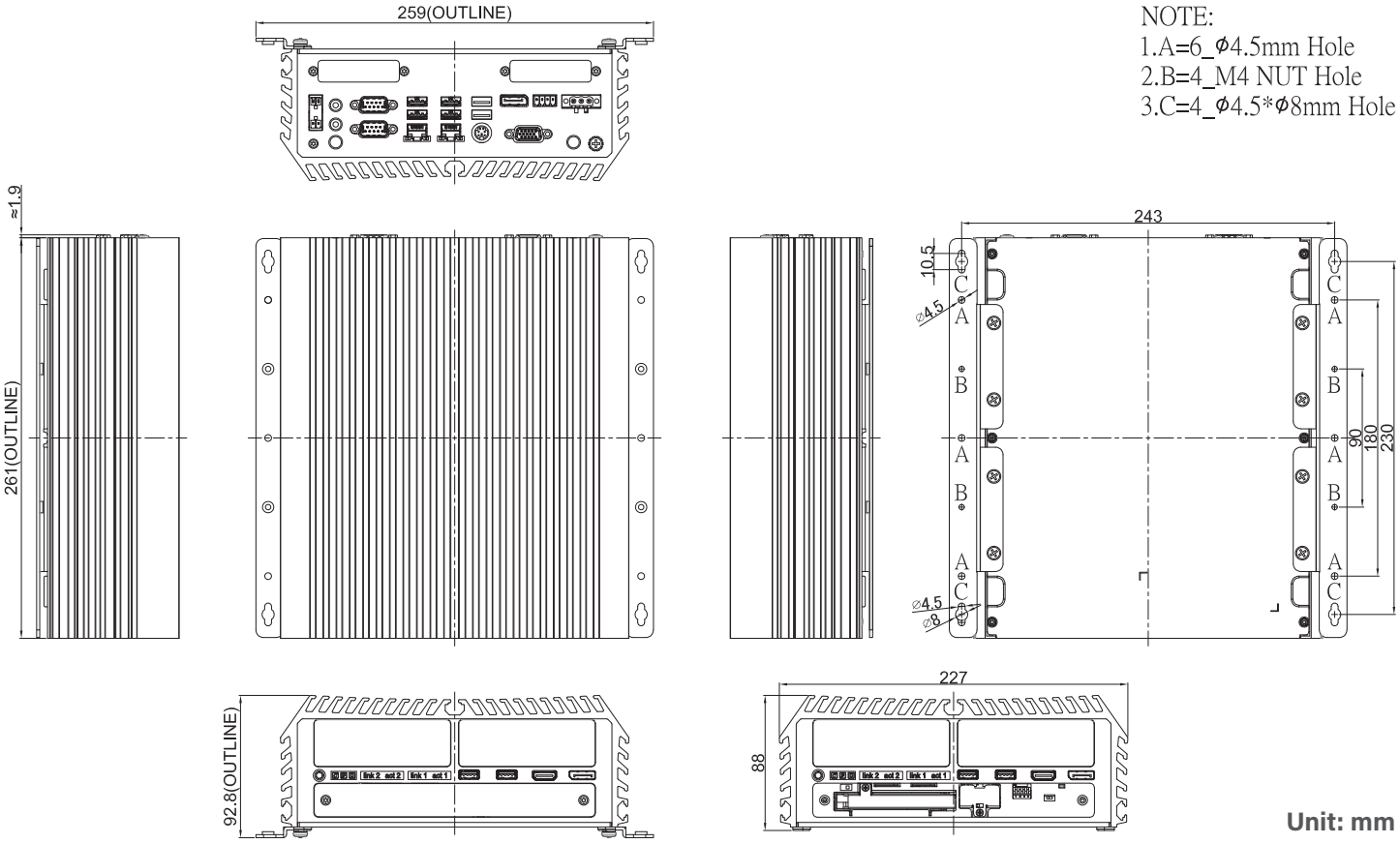

Unit: mm

DS-1501 Dimensions

NOTE:
1.A=6_Φ4.5mm Hole
2.B=4_M4 NUT Hole
3.C=4_Φ4.5*Φ8mm Hole

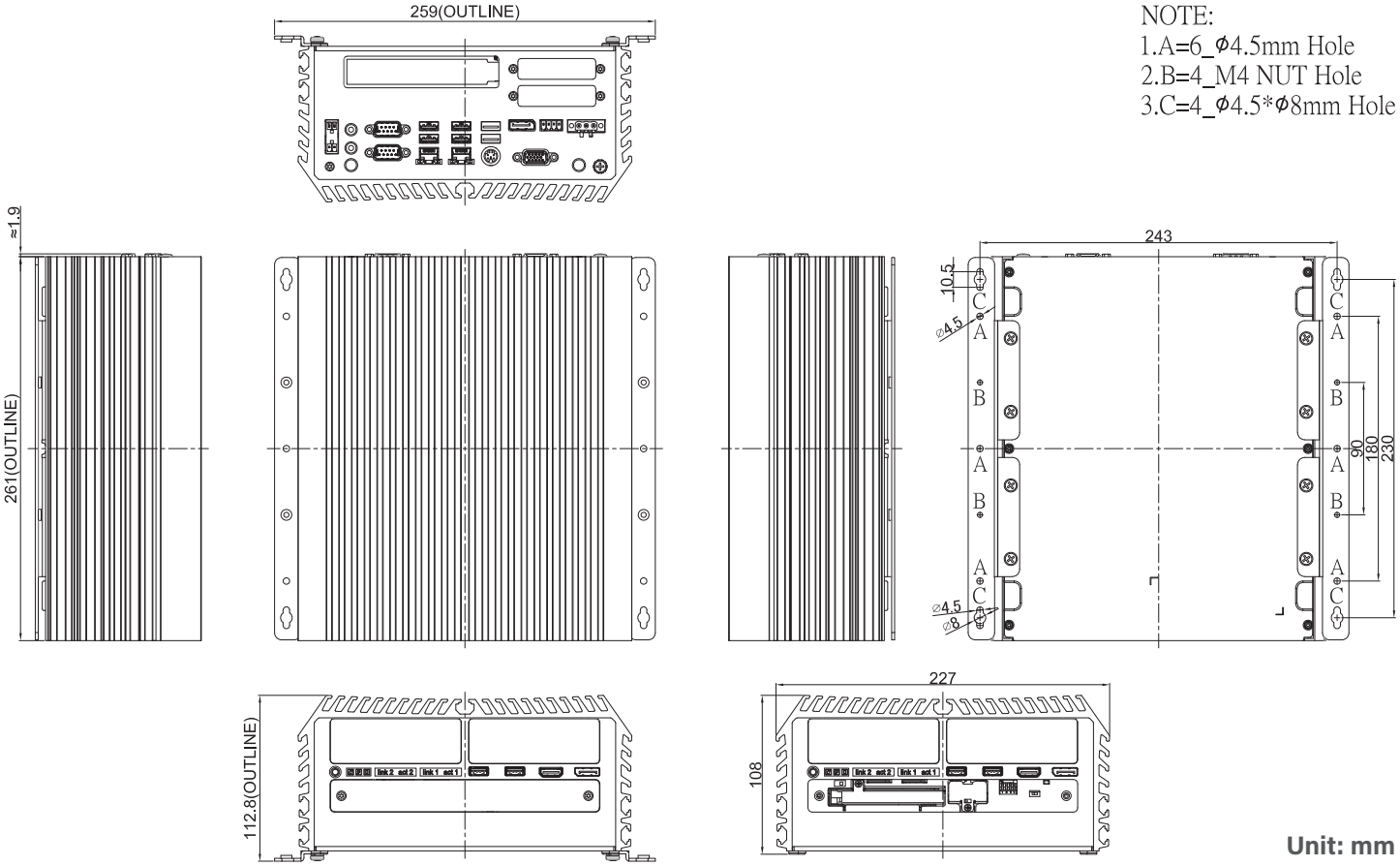

Unit: mm

DS-1502 Dimensions

NOTE:
1.A=6_Φ4.5mm Hole
2.B=4_M4 NUT Hole
3.C=4_Φ4.5*Φ8mm Hole

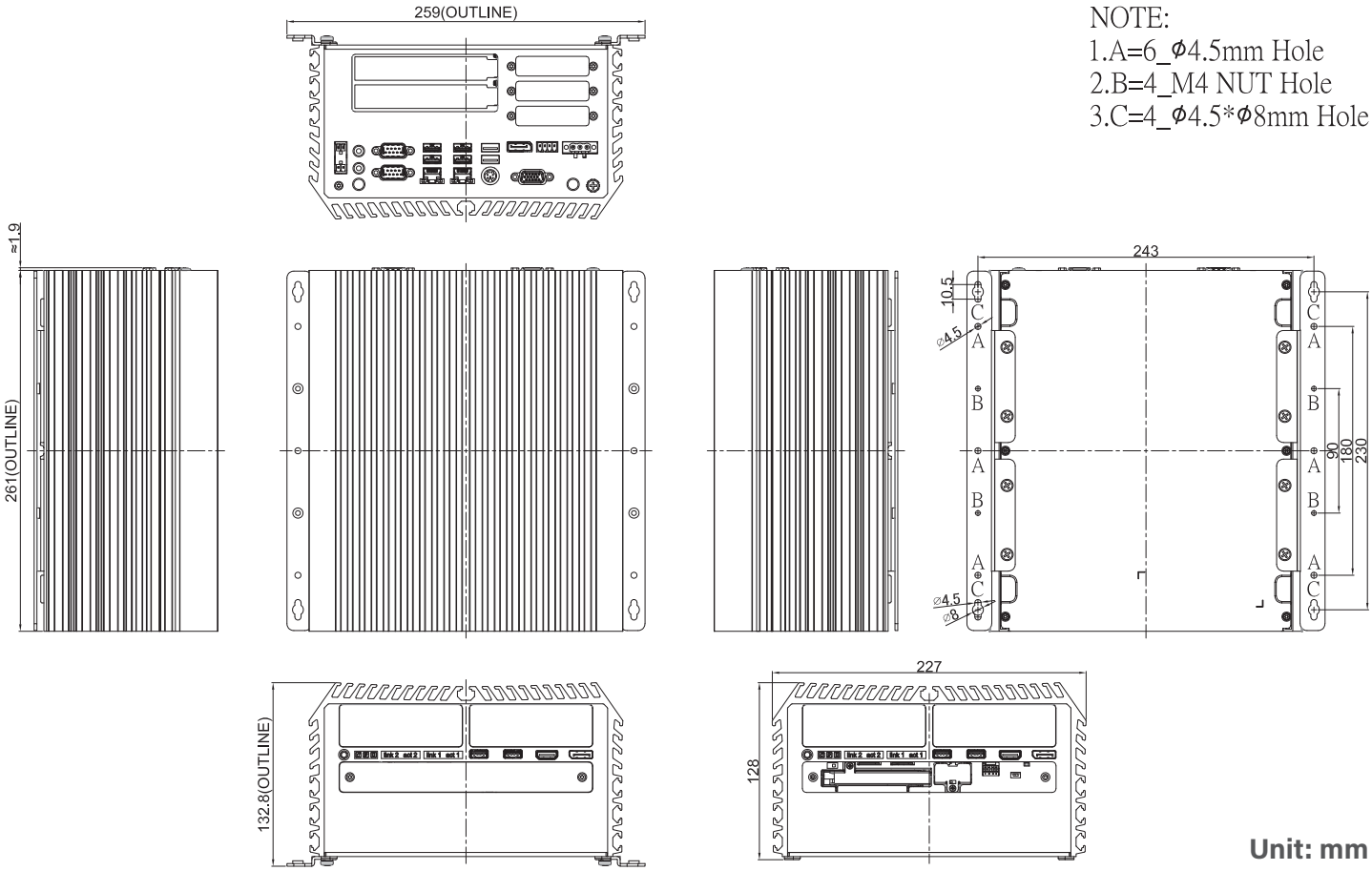

Unit: mm

Ordering Information

Available Models

Model No.	Description
DS-1500-R10	Intel® Arrow Lake-S Core™ Ultra 200S Series Processors, High Performance and PCIe Expandable Rugged Embedded Computer
DS-1501-R10	Intel® Arrow Lake-S Core™ Ultra 200S Series Processors, High Performance and PCIe Expandable Rugged Embedded Computer, Supporting 1x PCI/PCIe Expansion Card
DS-1502-R10	Intel® Arrow Lake-S Core™ Ultra 200S Series Processors, High Performance and PCIe Expandable Rugged Embedded Computer, Supporting 2x PCI/PCIe Expansion Cards

Package Checklist

▪ DS-1500 Series Embedded System x 1	▪ Heatsink Pack x 1
▪ Wall Mounting Kit x 1	▪ Screw Pack x 1
▪ Power Terminal Block Connector x 1	▪ Remote Function Terminal Block Connector x 2
▪ Fan Terminal Block Connector x 1	▪ M.2 Key B Type 3052 to 3042 Adapter Bracket x 3

Optional Modules and Accessories

Model No.	Description
CMI-LAN01-R12	CMI Module with 4x RJ45 Intel I210 GbE LAN Ports
CMI-M12LAN01-R12	CMI Module with 4x M12 Intel I210 GbE LAN Ports
CMI-XM12LAN01-R10	CMI Module with M12 X-Coded Connector, 4x Intel I210 GbE LAN Ports
CMI-10GLAN03-R10	CMI Module with 2x Intel X550 10GbE LAN, RJ45 Port
CMI-COM02	CMI Module with 4x RS232/422/485 Serial Ports
CMI-ICOM01	CMI Module with 4x Electrical Isolated RS232/422/485 Serial Ports
CMI-DIO02	CMI Module with 16x Optical Isolated DIO (8 in/8 out)
CFM-PoE03	CFM Module with PoE Control Function, Individual Port 25.5W
CFM-IGN101	CFM Module with Power Ignition Sensing Control Function, 12V/24V Selectable
CFM-TPM01-R10	CFM Module with Hardware TPM 2.0
RC-E16-01	Riser Card with 1 x PCIex16 Slot
RC-PI-01	Riser Card with 1 x PCI Slot
RC-E8E8-R10	Riser Card with 2 x PCIex8 Slots
RC-E16E1-01	Riser Card with 1x PCIex16, 1x PCIex1 slots, supports GPU card up to 75W
RC-E16E1-02-R10	Riser Card with 1x PCIex16, 1x PCIex1 slots, and auxiliary power connector, supports GPU card up to 130W
RC-E16PI-01	Riser Card with 1x PCIex16 and 1x PCI Slots (PCIe x16 Slot Supports Single Deck Add-on Card)
RC-PIPI-01	Riser Card with 2x PCI Slots
AC-BE01-R10	M.2 Key B Type 2242 to M.2 Key E Type 2230 Adapter Card
UB1004	Universal Bracket with 4x DB9 Cutout
UB1010	Universal Bracket with 4x M12 Cutout

UB1012	Universal Bracket with 4x RJ45 Cutout
UB1018	Universal Bracket with DIO Cutout
UB1028	Universal Bracket with 2x RJ45 Cutout
UB1030-R10	Universal Bracket with 4x M12 X-Coded Cutout
UB0303	2x Universal Bracket each with 1x DB9 Cutout
UB0311	Universal Bracket with 2x RJ45 Cutout
UB0331-R10	Universal Bracket with 2x Antenna Hole
FAN-EX101	External Fan with 4pin Terminal Block Plug, Mounting Bracket, Support smart fan
FAN-UB100	Internal Exhaust Fan with 4pin Connector
FAN-UB101	Internal Intake Fan with 4pin Connector
MEC-LAN-2002i-S	M.2 2242/2260/2280 (B+M key) 2-port 10/100/1000 isolated Ethernet board(0°C~+70°C), 2x RJ45 Connector, Cervoz
MEC-LAN-2002i	M.2 2242/2260/2280 (B+M key) 2-port 10/100/1000 isolated Ethernet board(-40°C~+85°C), 2x RJ45 Connector, Cervoz
MEC-LAN-2602i	M.2 2280 (B+M key) 2-port 2.5GbE isolated Ethernet board(-40°C~+85°C), 2x RJ45 Connector, Cervoz
MEC-COM-2012	M.2 2242/2260/2280 (B+M key) 2-port RS-232 serial board(-40°C~+85°C), 2x DB9 Connector, Cervoz
MEC-COM-2032i	M.2 2242/2260/2280 (B+M key) 2-port RS-232/422/485 isolated serial board (-40°C~+85°C), 2x DB9 Connector, Cervoz
MEC-CAN-2812i	M.2 2242/2260/2280 (B+M key) dual isolated CAN bus 2.0B board (-40°C~+85°C), 2x DB9 Connector, Cervoz
GST220A24-CIN	Adapter AC/DC 24V 9.2A 220W with 3pin Terminal Block Plug and Tubes, Level VI
GST360A24-CIN	Adapter AC/DC 24V 15A 360W with 3pin Terminal Block Plug and Tubes, Level VI
RSD-200D-24	Railway Single Output DC-DC Converter 200W / DC 24V
Power Cable	1M Power Cable with 3-Pin Terminal Block Plug, Stripped and Tinned End with Tube

Optional Module Configuration – Front side

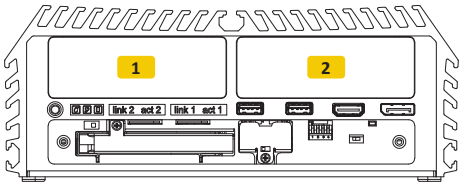

DS-1500

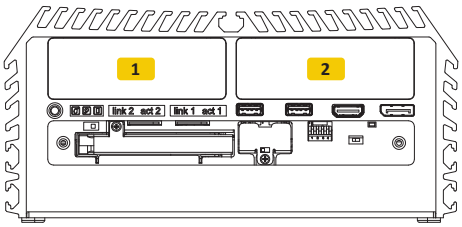

DS-1501

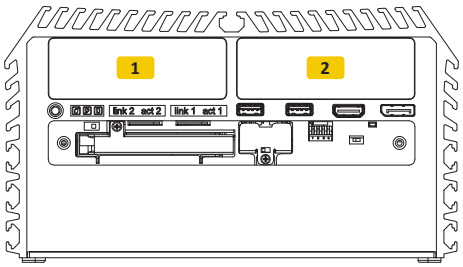

DS-1502

Model No.	Description	1	2
CMI-LAN01-R12/UB1012	CMI Module with 4x Intel I210 GbE LAN, RJ45 Port / 1x Universal Bracket with 4x RJ45 Cutout	V	V
CMI-M12LAN01-R12/UB1010	CMI Module with M12 Connector, 4x Intel GbE LAN / 1x Universal Bracket with 4x M12 Cutout	V	V
CMI-XM12LAN01-R10/UB1030-R10	CMI Module with M12 X-Coded Connector, 4x Intel I210 GbE LAN Ports / Universal Bracket with 4x M12 X-Coded Cutout	V	V
CMI-10GLAN03-R10/UB1028	CMI Module with 2x Intel X550 10GbE LAN, RJ45 Port / 1x Universal Bracket with 2x RJ45 Cutout	V	-
CMI-COM02/UB1004	CMI Module with 4x RS232/422/485 Ports (Support 5V/12V) / 1x Universal Bracket with 4x DB9 Cutout	V	V
CMI-ICOM01/UB1004	CMI Module with 4 x isolated RS232/422/485/ 1x Universal Bracket with 4x DB9 Cutout	V	V
CMI-DIO02/UB1018	CMI Module with 16DIO (8in 8out) / 1x Universal Bracket with DIO Cutout	V	V

Remark:
Maximum one CMI-COM02 or CMI-ICOM01 module can be installed in this system.

V : Compatible

Optional Module Configuration – Rear side

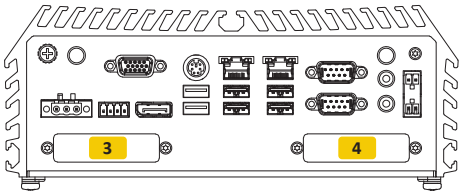

DS-1500

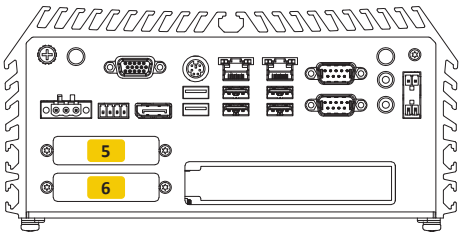

DS-1501

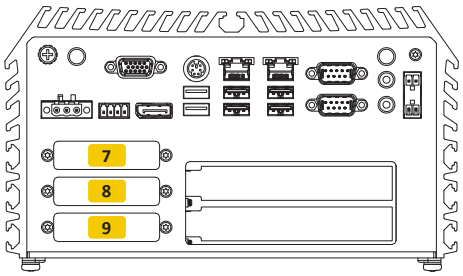

DS-1502

Model No.	Description	DS-1500		DS-1501		DS-1502		
		3	4	5	6	7	8	9
MEC-LAN-2002i(-S) / UB0311	M.2 Module with 2x LAN Ports, 2x 30cm cable / 1x Universal Bracket with 2x RJ45 Cutout	V	V	V	V	V	V	V
MEC-LAN-2602i / UB0311	M.2 Module with 2x 2.5GbE LAN Ports, 2x 30cm cable / 1x Universal Bracket with 2x RJ45 Cutout	V	V	V	V	V	-	-
MEC-COM-2012i / UB0303	M.2 Module with 2x RS-232 Ports, 1x Standard DB9 Cable / 2x Universal Bracket each with 1x DB9 Cutout	V		V		-	V	
MEC-COM-2032i / UB0303	M.2 Module with 2x RS-232/422/485 Ports, 1x Standard DB9 Cable / 2x Universal Bracket each with 1x DB9 Cutout	V		V		-	V	
MEC-CAN-2812i / UB0303	M.2 Module with 2x isolated CAN bus 2.0B Ports, 2x Standard DB9 Cable / 2x Universal Bracket each with 1x DB9 Cutout	V		V		-	V	
FAN-UB100	Internal Exhaust Fan with 4pin Connector	-	-	-	-	V		
FAN-UB101	Internal Intake Fan with 4pin Connector	-	-	-	-	V		

V : Compatible

Riser Card Configuration

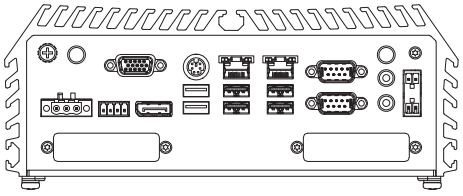

DS-1500

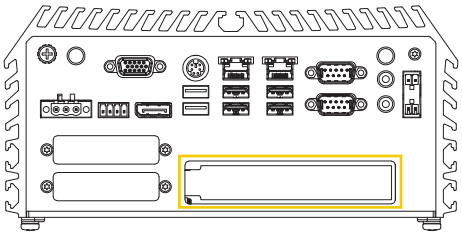

DS-1501

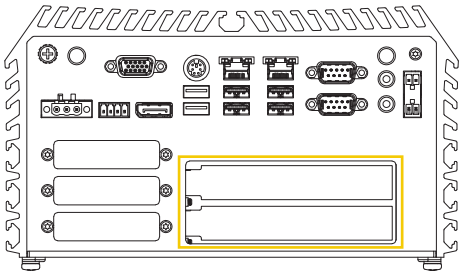

DS-1502

Model No.	Description	DS-1500	DS-1501	DS-1502
RC-E16-01	Riser Card with 1 x PCIex16 Slot	-	V	-
RC-PI-01	Riser Card with 1 x PCI Slot	-	V	-
RC-E8E8-R10	Riser Card with 2 x PCIex8 Slots	-	-	V
RC-E16E1-01	Riser Card with 1x PCIex16, 1x PCIex1 slots, supports GPU card up to 75W	-	-	V
RC-E16E1-02-R10	Riser Card with 1x PCIex16, 1x PCIex1 slots, and auxiliary power connector, supports GPU card up to 130W	-	-	V
RC-E16PI-01	Riser Card with 1x PCIex16 and 1x PCI Slots (PCIe x16 Slot Supports Single Deck Add-on Card)	-	-	V
RC-PIPI-01	Riser Card with 2x PCI Slots	-	-	V

V : Compatible

Compatible GPU List

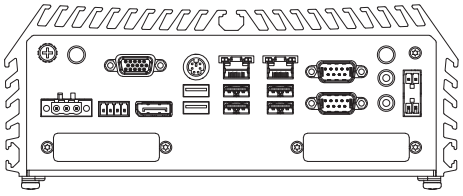

DS-1500

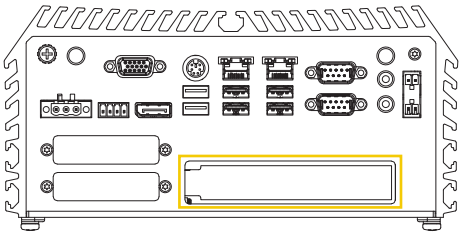

DS-1501

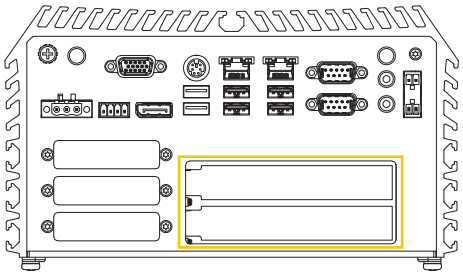

DS-1502

Model	Architecture	Dimesion (L x H mm)	Slot	Power Consumption	DS-1500	DS-1501	DS-1502
RTX 4000 SFF	Ada Lovelace	167.6 x 68.6	Dual Slot	70W	-	-	v
RTX 2000	Ada Lovelace	167.6 x 68.6	Dual Slot	70W	-	-	v
RTX A2000 | RTX A2000 12GB	Ampere	167.6 x 68.6	Dual Slot	70W	-	-	v
RTX A1000	Ampere	162.6 x 68.6	Single Slot	50W	-	v	v
RTX A400	Ampere	162.6 x 68.6	Single Slot	50W	-	v	v
T1000 | T1000 8GB	Turing	155.9 x 68.9	Single Slot	50W	-	v	v
T600	Turing	155.9 x 68.9	Single Slot	40W	-	v	v
T400 | T400 4GB	Turing	155.9 x 68.9	Single Slot	30W	-	v	v

contradata®

Distributore per l'Italia: Contradata Milano S.r.l.

Via Solferino 12 - 20900 Monza (M B) - Italy
Tel: (+39) 039-230.14.92 Email: info@contradata.it

www.contradata.it

Updated: Sep. 19, 2025.

© Cincoze Co., Ltd. All Rights Reserved. Specifications subject to change without notice.
All product names, logos, and brands are the property of their respective owners. All company, product and service names used in this document are for identification purposes only. The use of these names, logos, and brands does not imply endorsement.